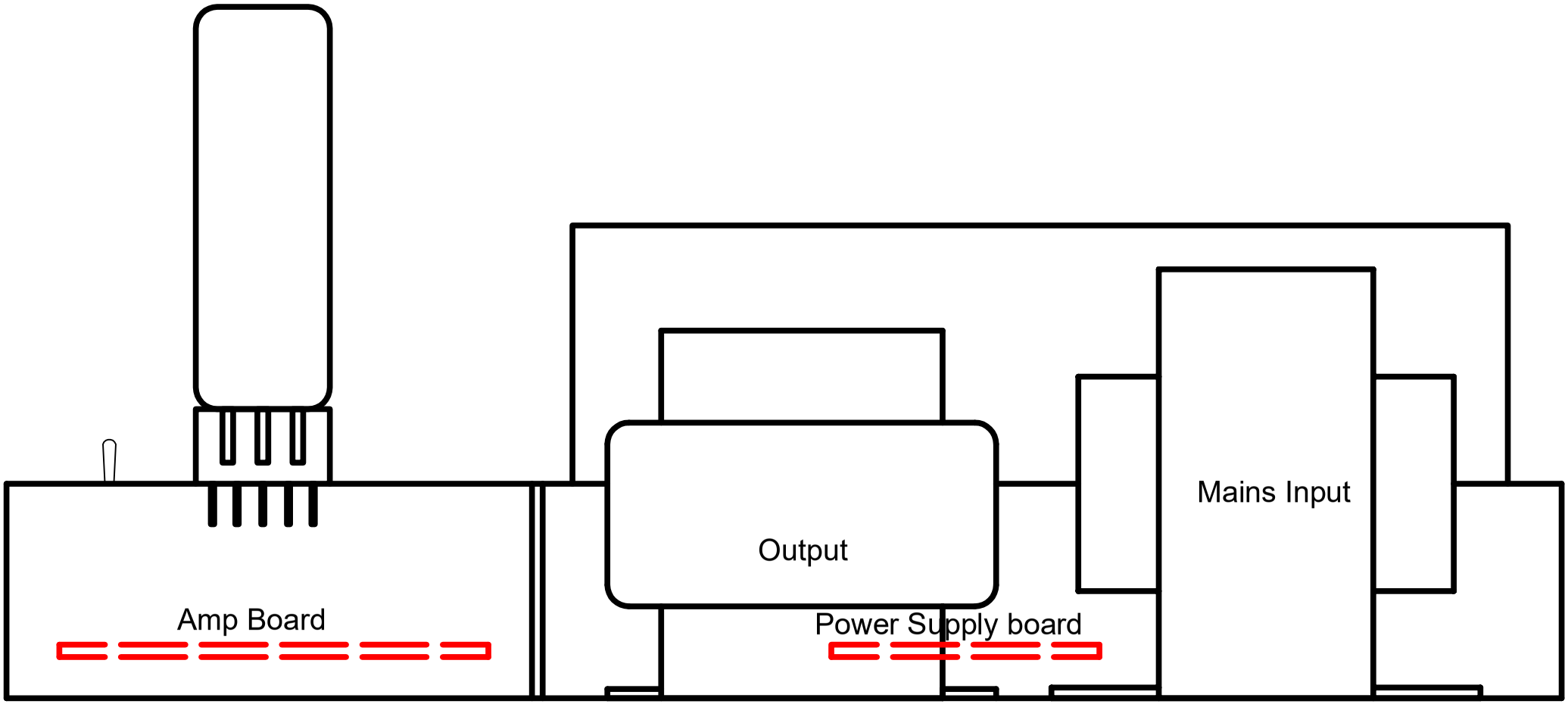
Mains Input
Output
Amp Board
Power Supply board